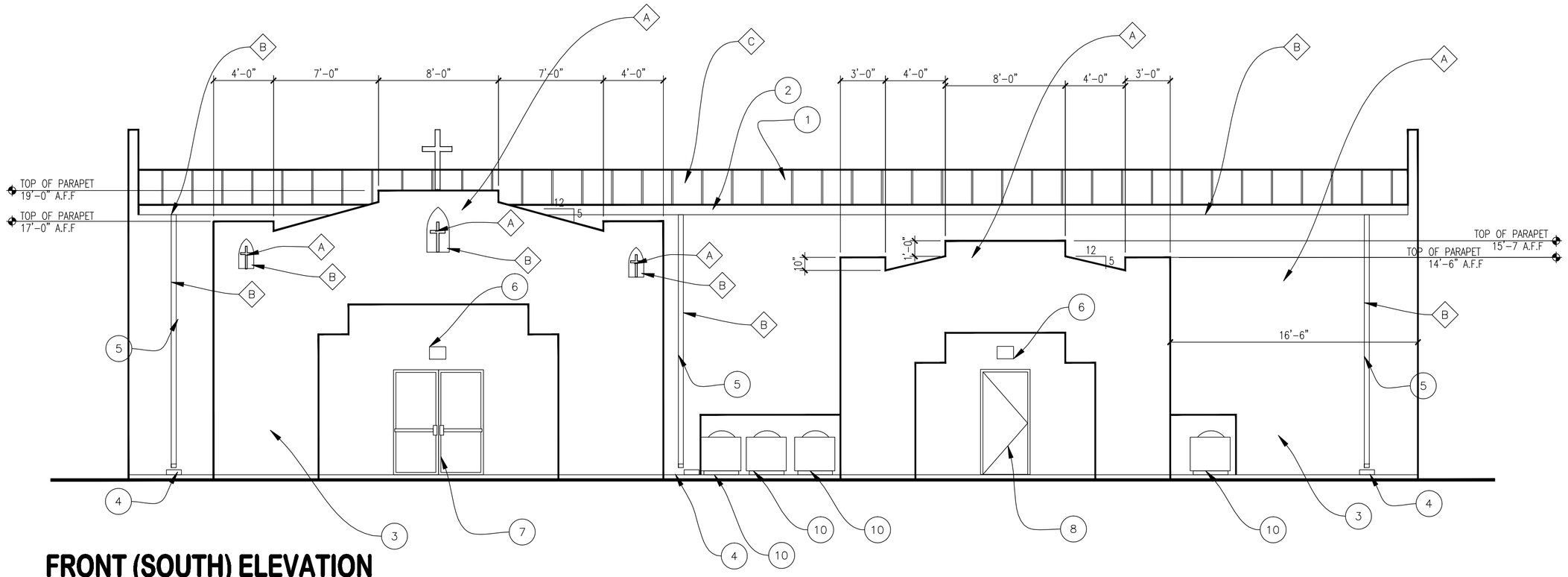

FRONT (SOUTH) ELEVATION
3/16"=1'-0"

ELEVATION KEYNOTES

1. R-PANEL ROOFING, SEE STRUCTURAL AND METAL BUILDING SHEETS
2. CONTINUOUS RAIN GUTTER THE LENGTH OF BUILDING ON NORTH AND SOUTH SIDES, SEE METAL BUILDING DRAWINGS
3. PROVIDE THIN COAT STUCCO SYSTEM OVER EXTERIOR WALLS, SEE METAL BUILDING DRAWINGS
4. PROVIDE 12 X 24" CONCRETE SPLASH BLOCKS AT RAIN GUTTERS
5. PROVIDE 4 X 4 RAIN GUTTER DOWNSPOUTS AS INDICATED. SECURE TO WALL WITH MANUFACTURER'S PROVIDE BRACEKTS AND ANCHOR DEVICES
6. PROVIDE EXTERIOR LIGHT AT ALL EXTERIOR DOORS. SEE ELECTRICAL
7. PROVIDE DOUBLE 3070 STOREFRONT DOORS, SEE DOOR SCHEDULE
8. PROVIDE SINGLE 3070 STEEL HOLLOW CORE DOOR, SEE DOOR SCHEDULE
9. NOT USED
10. PROVIDE GROUND MOUNTED A/C COMPRESSOR UNITS, SEE MECHANICAL
11. PROVIDE NEW SES CABINET ON EAST SIDE OF BUILDING
12. PROVIDE FALSE WINDOW CAVITYS ON EAST AND WEST ELEVATION

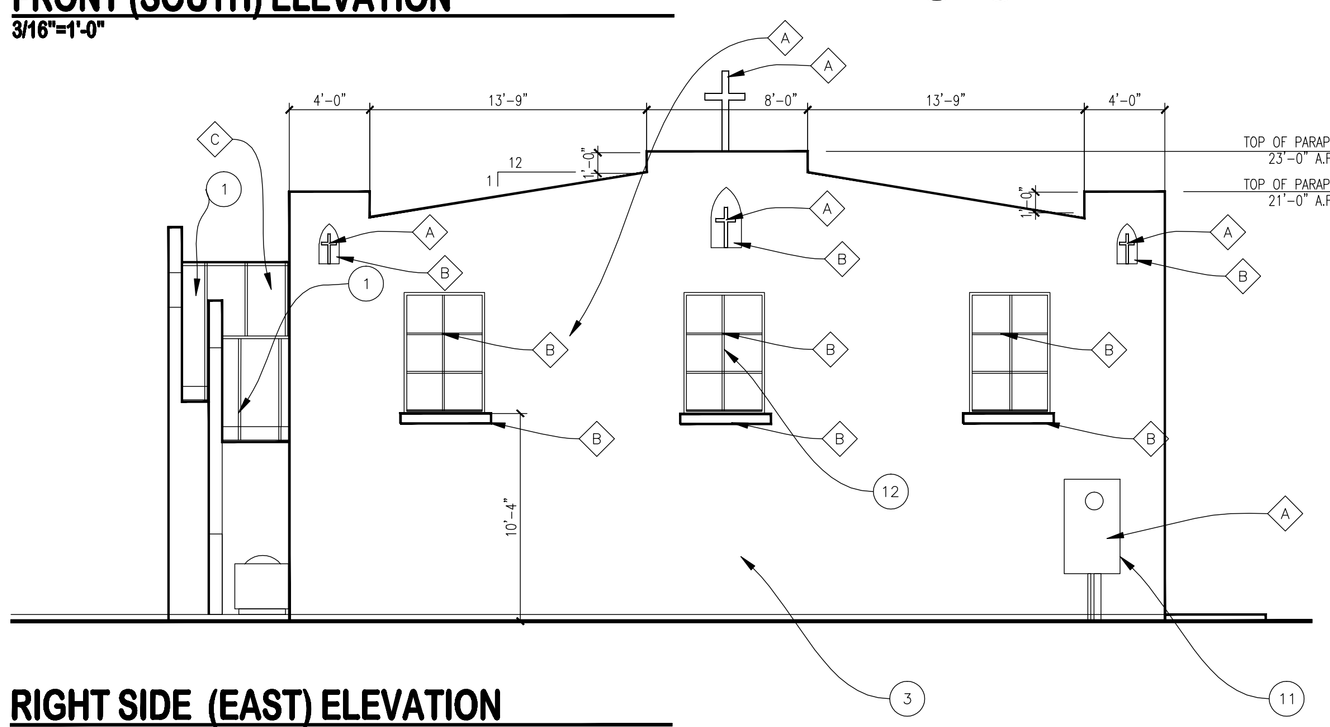

RIGHT SIDE (EAST) ELEVATION
3/16"=1'-0"

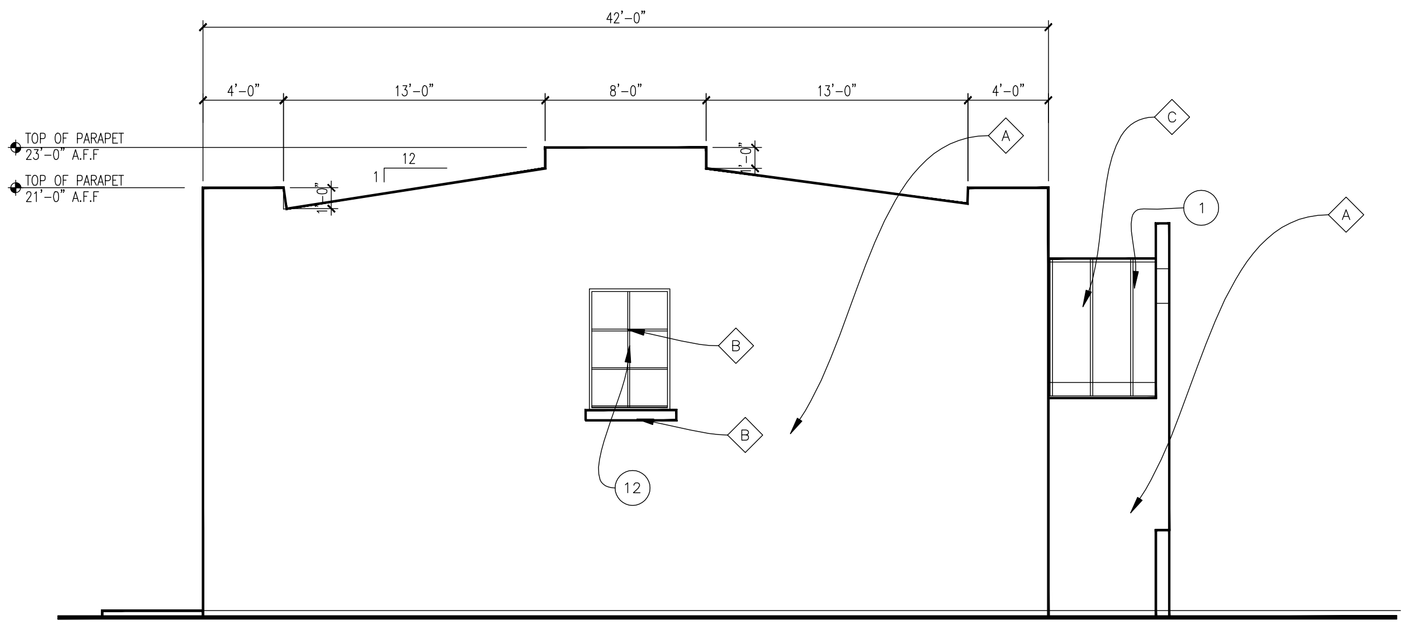

LEFT SIDE (WEST) ELEVATION
3/16"=1'-0"

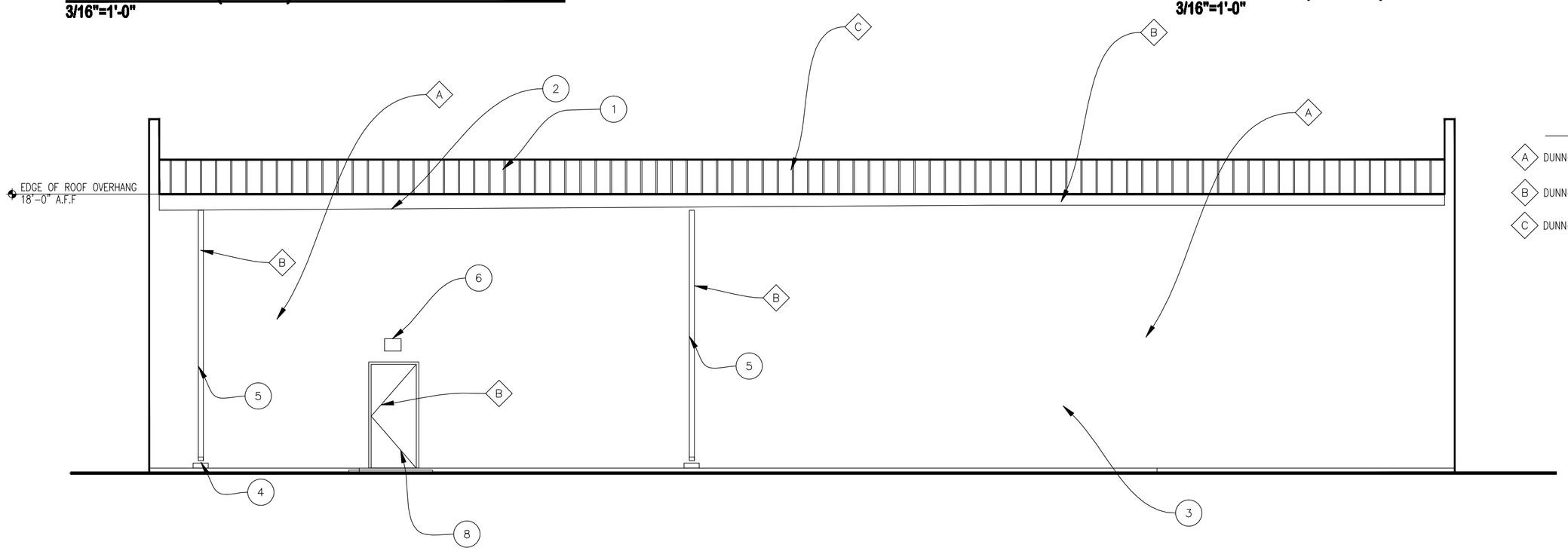

REAR (NORTH) ELEVATION
3/16"=1'-0"

BUILDING COLORS

- A — DUNN-EDWARDS DEW 379 OFF WHITE
- B — DUNN-EDWARDS DEW 382 FADED GREY
- C — DUNN-EDWARDS DE 6068 COBBLESTONE PATH

Pinal Design Group LLC
711 E. WALNUT AVE, CASA GRANDE, AZ. 85222.
TEL 520-466-5091, E-MAIL: PDGROUPLLC@MSN.COM

© PINAL DESIGN DRAFTING SERVICES 6-23-09
THESE DRAWINGS MAY NOT BE COPIED, REPRODUCED OR ALTERED IN ANY MANNER WITHOUT PERMISSION BY PINAL DESIGN DRAFTING SERVICES

OLE A. SOLBERG, P.E.
508 E. BARRUS PLACE
CASA GRANDE, AZ. 85222
520-836-0270

FLORENCE BAPTIST CHURCH NEW CHURCH BUILDING
NEW 3,880 S.F. PRE-ENGINEERED STEEL BUILDING AND REQUIRED SITE IMPROVEMENTS FOR FLORENCE BAPTIST CHURCH
30 N. WILLOW FLORENCE AZ. 85232

BUILDING ELEVATIONS

JOB NO. 2009-09-OC
DATE 6-23-09
DRAWN CHUCK
SCALE GIVEN
REVISIONS

A2.1